Rotary Drilling Rig

TR300DH

SKC
Makina

Electric system

- Wireless transmission system and GPS remote service

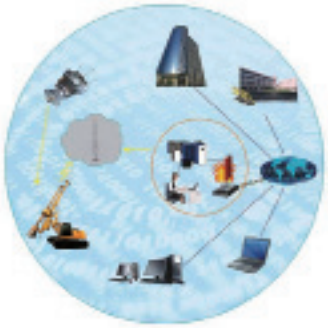

- Construction monitoring system

- The stability of drilling rig monitoring system

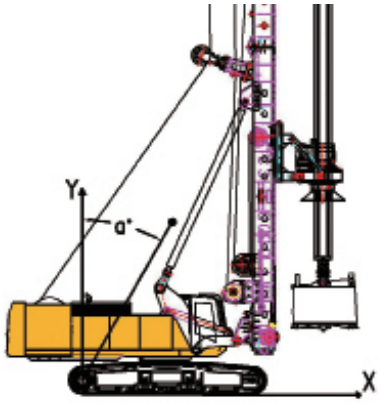

- Emergency switch(optional) and concentration of wiring harness

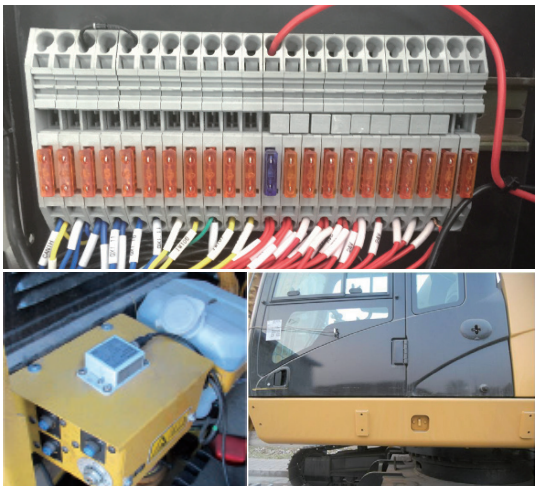

Hydraulic System

- Caterpillar's main hydraulic system
- The main pump negative flow control system
- The auxiliary pump load sensitive control system

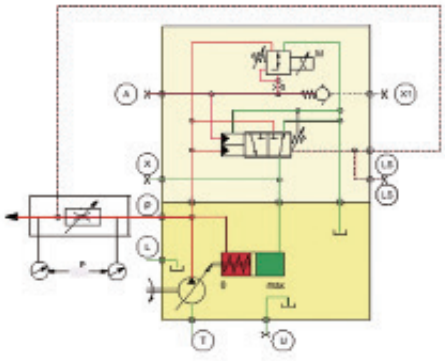

- Multiple unit valve adopt electric control operation, Drilling precision is higher

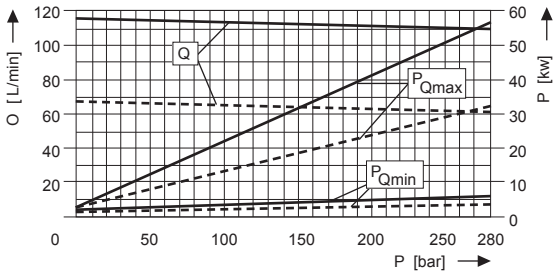

- The main winch hydraulic oil confluence technology improve the winch speed by 50%
- Crowd force stepless adjustment improve construction efficiency
- The rotary drive self-adaptive drilling system

Mechanical System

- Kelly drilling and CFA drilling
- Caterpillar Undercarriage

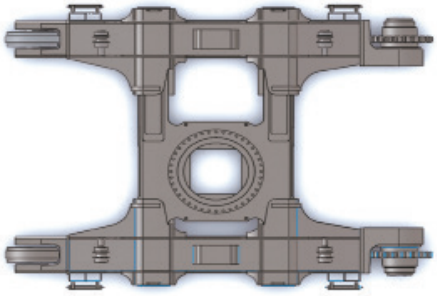

- Caterpillar Undercarriage structure and the mast structure , all materials are special high-strength steel

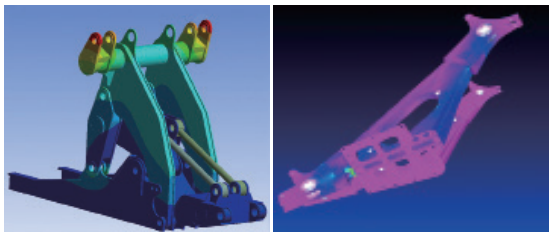

- Cross Roller Bearing improves the drilling accuracy significantly

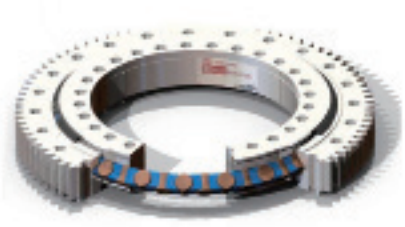

- Reducer, motor, pump, valve configuration of the international first-class brand

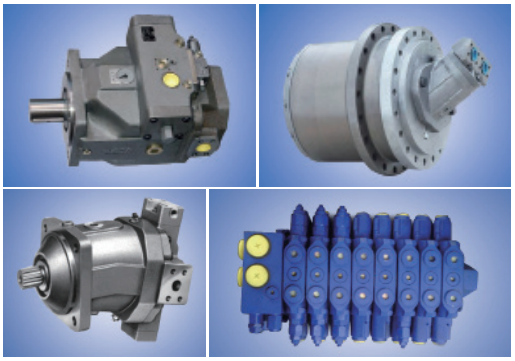

- The broken line reel technology and the Postposition Single layer main winch technology make the service life of wire rope improve greatly

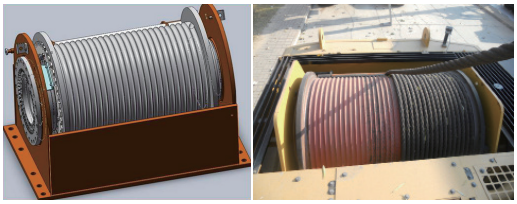

-
Rotary Drive multi-stage damping structure improves the borehole verticality and structural life

- Reasonable layout, repair, maintenance are convenient

Dimensions

The TR300DH rotary drilling rig has an operating weight of approx 90 ton . It is suited for:

- Rotary drilling
- Drilling cased boreholes (installation of casing by rotary drive))

TR300DH rotary drilling rig is mainly used in the construction of large bridges, elevated railway, larger aperture and deep pile construction, and this machine can match with various of drilling tools for hole operation such as Auger or Bucket, core barrel,cleaning bucket etc.

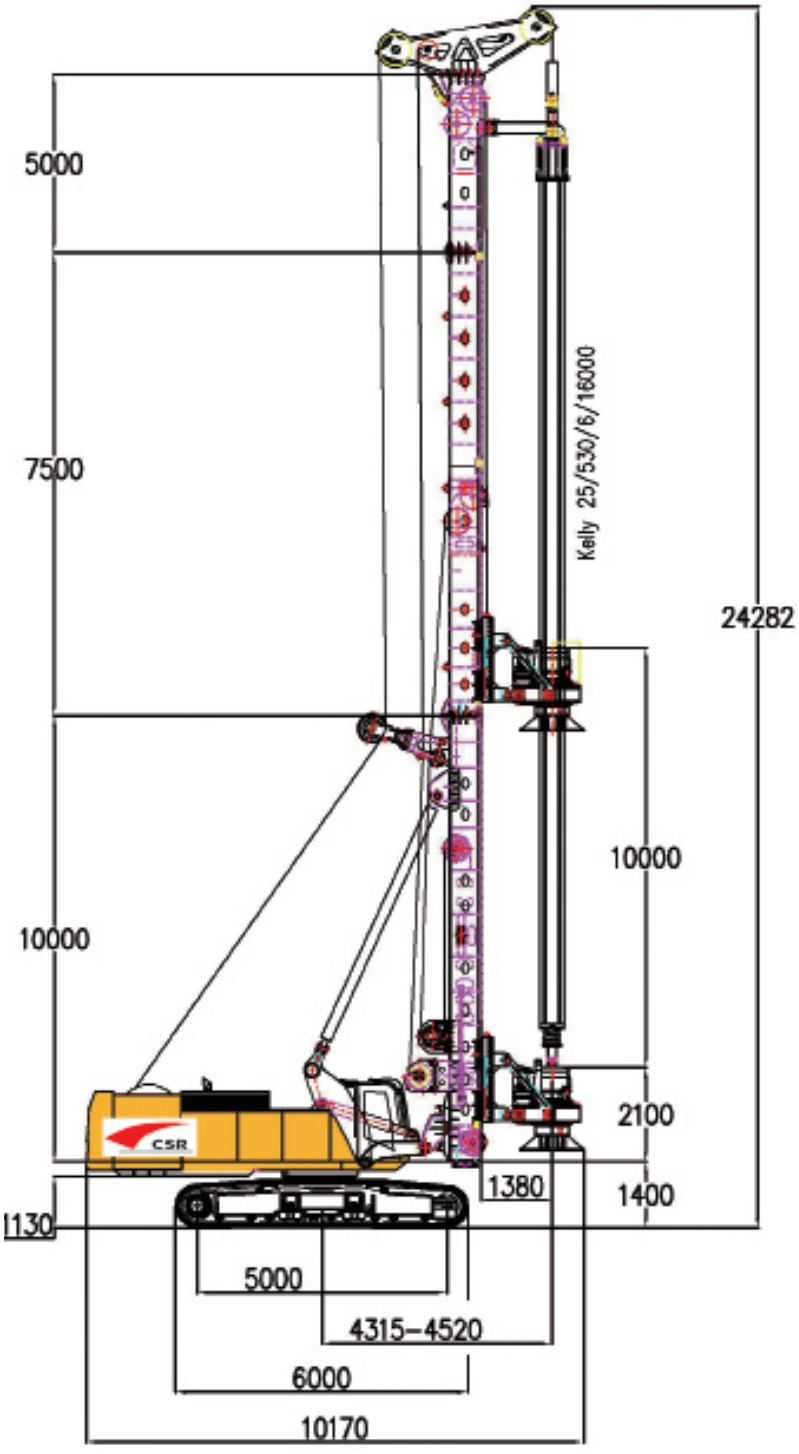

Technical parameters

Kelly drilling system	
Overall weight	75.8ton
Operation weight (with kelly)	90 ton
Rotary Drive	
Nominal torque	300 kNm
Speed of rotation	6-23 rpm
Crowd system	
Crowd force push/pull	260/260 kN
Stroke (kelly system)	10000 mm
Speed down/up	5/6 m/min
Rope diameter/length	26 mm/65m
Main winch	
Line pull (1st layer)	300 kN
Rope diameter/length	36mm/130m
Line speed max	50m/min
Auxiliary winch	
Line pull (1st layer)	100kN
Rope diameter/length	20 mm/75m
Line speed max	60m/min
Mast inclination	
Backward/forward/lateral	15/5/6

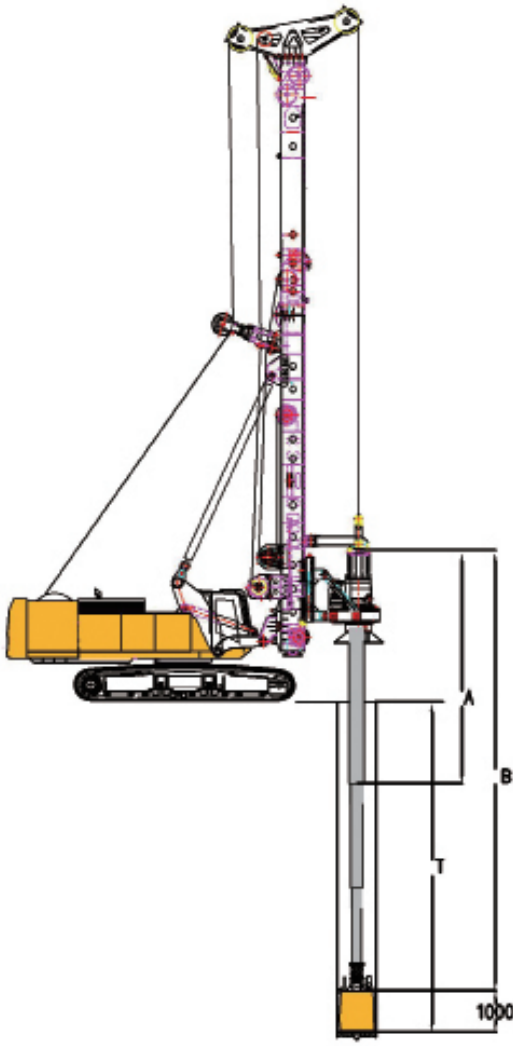

Standard module

- Rotary drive (three reduction gears), self-adaptive drilling
- Hoist limit switch on main and auxiliary winches
- PLC processor and standard monitor unit
- Display of pump pressures and fault messages
- Mast inclination measurement on X/Y axes
- Display of drilling depth
- Swing caution light and stability monitoring system
- Mmultiple unit valve adopts electric control operation

Drilling depths			
Friction kelly bar	**A(m)**	**B(m)**	**T(m)**
Φ530-6x16	16	92.2	88.2
Φ530-6x15	15	86.2	82.2
Φ530-5x16	16	77	73
Φ530-5x15	15	72	68
Interlocking Kelly bar			
Φ530-4x16	16	61.8	57.8
Φ530-4x15	15	57.8	53.6
Φ530-3x16	16	46.6	42.6
Φ530-3x15	15	43.6	39.6
Max. Drilling diameter 2500 mm			

Base Carrier CAT336D

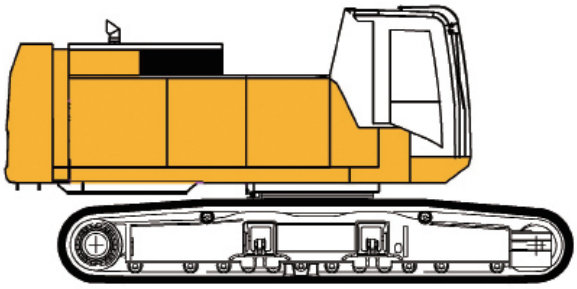

Engine	
Rated output	261kW@1800rpm
Exhaust emission standard	Tier Ⅱ
Diesel tank	620L
Ambient air temperature	-20°up to 40°
Sound pressure level in cabin	78 dB
Sound power level	112 dB

Hydraulic system	
Hydraulic power output	195 kW
Hydraulic pressure	350 bar
Flow rates (main pump)	2x265 l/min
Flow rates (auxiliary pump)	90 l/min
Hydraulic oil main tank capacity	520 l

Undercarriage	TC325VH
Track width (retracted/extended)	2200mm/3500mm
Overall width of crawlers (retracted/extended)	3000mm/4300mm
Width of track shoes	800 mm
Overall length of crawlers	6000 mm
Traction force	510 kN
Travel speed	1.3 km/h

Rotary Drive

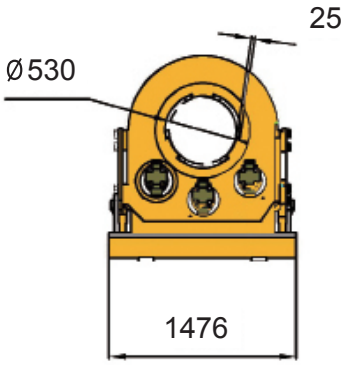

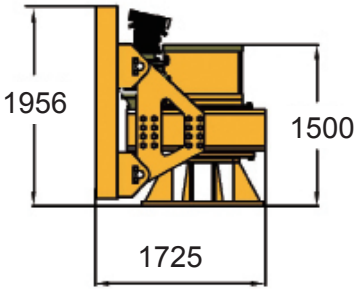

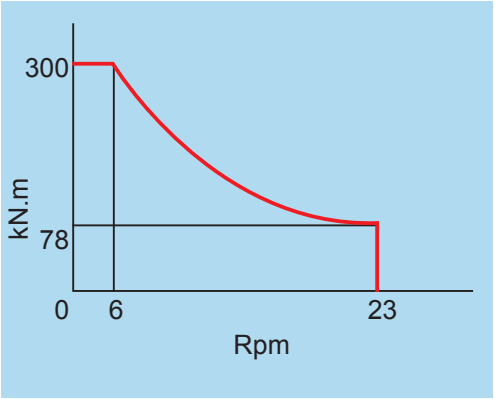

Rotary Drive Standard equipment

- Integrated Kelly damping system (Four level damping)
- Exchangeable Kelly drive adapter
- Exchangeable Kelly drive keys
- Self-adaptive drilling system

Transport data

G=54.2 ton

G=47ton

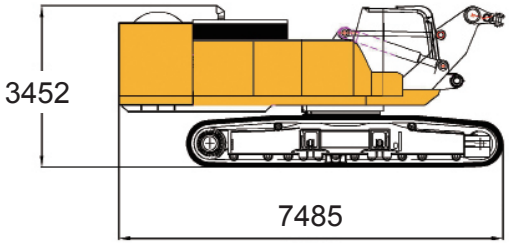

G=7.2ton

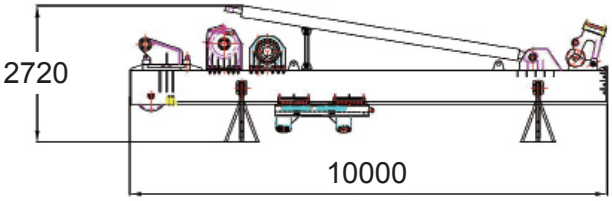

G=3 ton

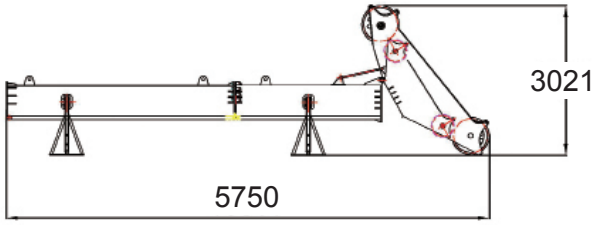

G=1.6 ton

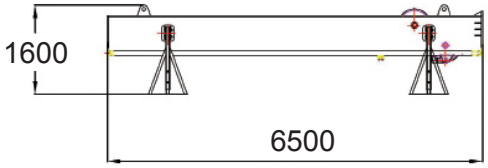

G=11.5ton

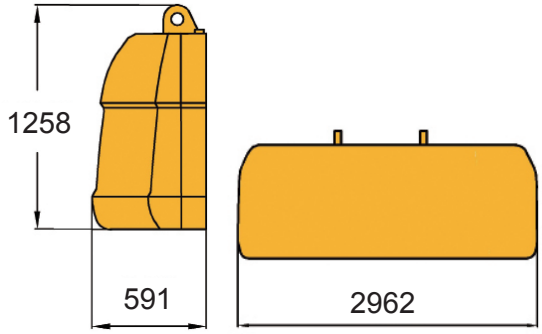

G=5.5 ton

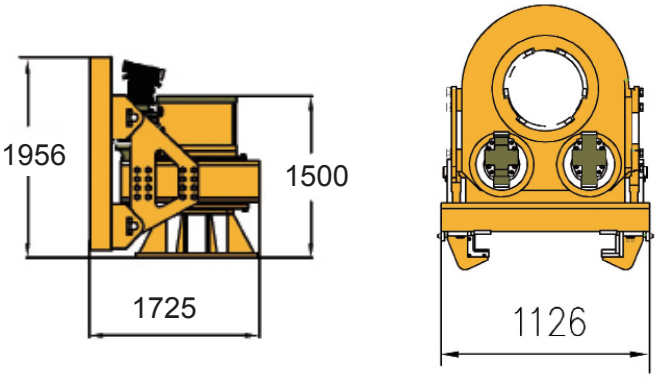

ISO9001:2000
国际质量管理体系认证

Contact information

SKC Mühendislik San. ve Tic. Ltd. Şti.
İMES Makina İhtisas OSB, Küçük Sanayi Sitesi, C5 BLOK, NO: 2 Dilovası-Gebze Kocaeli /TURKEY

Tel: +90 262 502 06 54
Gsm: +90-532 470 30 10
Fax: +90 262 502 06 57

E-mail: info@skcmakina.com
Web: www.skcmakina.com

All technical data are purely indicative and subject to change without notice

Other info: